CONTIMAC

Catalogo parti di ricambio
Spare parts catalogue
Ersatzteilkatalog
Catalogue pieces detachees
Catalogo de repuestos

Model: ECU 201 HP 1,5

Code: 1121030026

Valid from: 01/09/2018

INDEX

Table	Model	pag.
1	ECU201_00	4
2	F205-F206_00	6
3		
4		
5		
6		
7		
8		
9		
10		

CONTIMAC

Model: ECU 201 HP 1,5
Code: 1121030026
Valid from: 01/09/2018
Tav.: **ECU201_00**

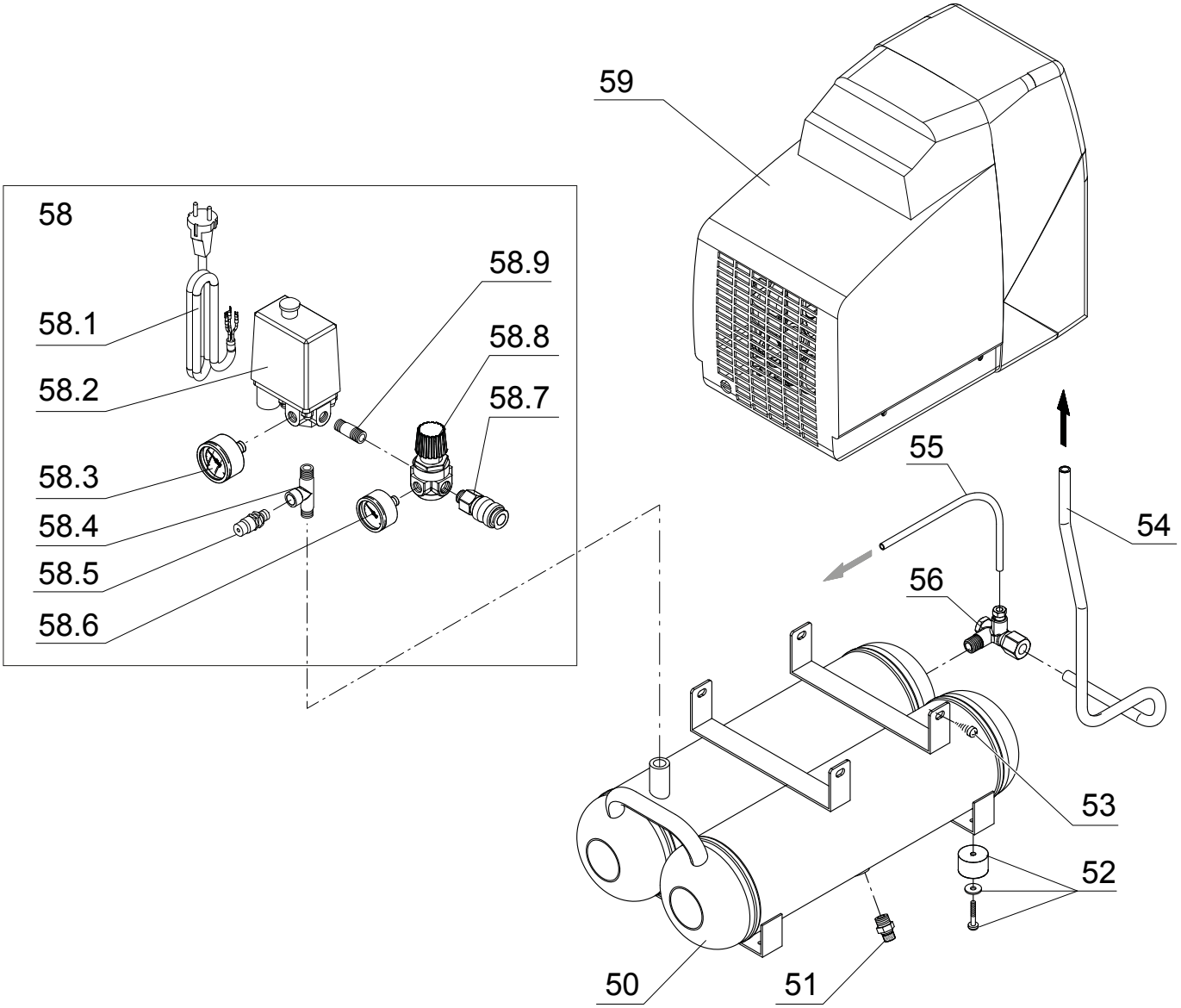

CONTIMAC

Model: ECU 201 HP 1,5
Code: 1121030026
Valid from: 01/09/2018
Tav.: **ECU201_00**

N°	Code	Q.ty	Q.ty*	Description	N°	Code	Q.ty	Q.ty*	Description
50	1125150824	1		SERBATOIO TANK					
51	1127130009	2	20	RUBINETTO DI SPURGO TAP					
52	1120001957	1		KIT PIEDI KIT					
53	1127010229	4		VITE TC CROSS 5X20 TAP TITE SCREW					
54	1127230436	1		TUBO ALIMENTAZIONE INFEED HOSE					
55	1127230001	1		TUBO RILSAN RILSAN TUBE					
56	1127190020	1	20	VALVOLA DI RITEGNO CHECK VALVE					
58	1124050673	1	20	KIT PRESSOSTATO PRESS. SWITCH KIT					
58.1	1127320645	1		CAVO ALIMENTAZIONE POWER CABLE					
58.2	1127250074	1	20	PRESSOSTATO PRESSURE SWITCH					
58.3	1127110030	1	20	MANOMETRO PRESSURE GAUGE					
58.4	1127080253	1		RACCORDO "T"1/4"MFM FITTING					
58.5	1127190202	1	10	VALVOLA DI SICUREZZA RELIEF VALVE					
58.6	1127110024	1	20	MANOMETRO PRESSURE GAUGE					
58.7	1127130057	1		RUBINETTO UNIVERSALE TAP					
58.8	1127100064	1		RIDUTTORE DI PRESSIONE PRESSURE REDUCER					
58.9	1127080012	1		NIPPLO 1/4" NIPPLE					
59	1123010953	1		GRUPPO POMPANTE F206 PUMP UNIT					

Q.ty = Quantità unitaria / Single unit quantity / Quantité unitaire / Cantidad unitaria / Einzeleinheitsmenge
Q.ty* = Ricambi consigliati in percentuale / Suggested spare parts in percentage / Pièces de rechange suggérées en pourcentage / Piezas de repuesto sugeridas en porcentaje / Vorgeschlagene Ersatzteile in Prozent

CONTIMAC

Model: ECU 201 HP 1,5
Code: 1121030026
Valid from: 01/09/2018
Tav.: **F205-F206_00**

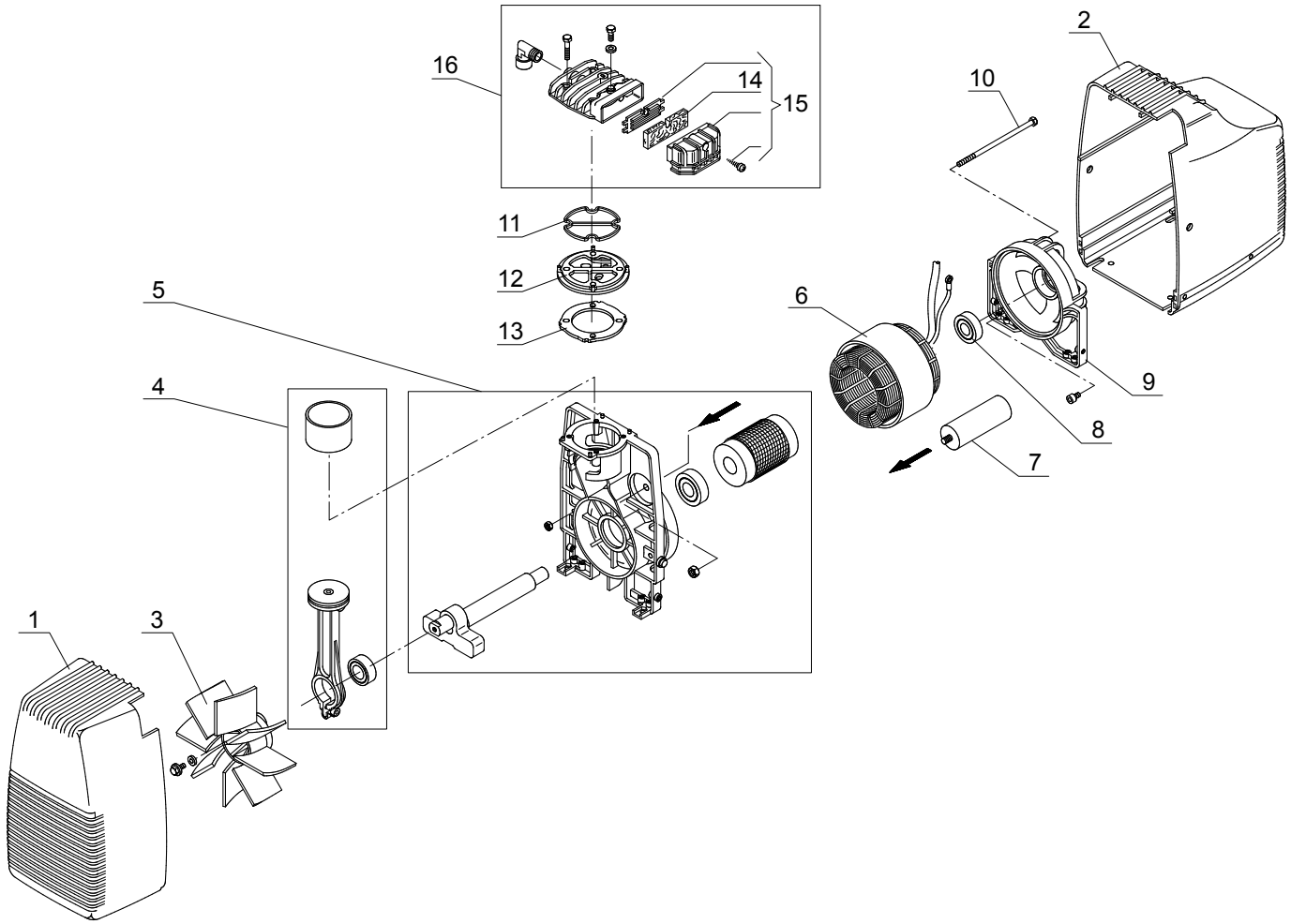

CONTIMAC

Model: ECU 201 HP 1,5
Code: 1121030026
Valid from: 01/09/2018
Tav.: **F205-F206_00**

N°	Code	Q.ty	Q.ty*	Description	N°	Code	Q.ty	Q.ty*	Description
1	1127150059	1		CARENA COMPRESSORE HOUSING					
2	1127150058	1		CARENA MOTORE HOUSING					
3	1127200014	1	10	VENTOLA DI RAFF. FAN					
4	1124190027	1		KIT BIELLA/PISTONE/CILINDRO KIT					
5	1124280053	1		KIT ALBERO A GOMITI KIT					
6	1124010160	1		MOTORE MONOFASE SINGLE PHASE MOTOR					
7	1127310032	1	10	CONDENSATORE MF.30 V450 CAPACITOR					
8	1127060001	1		CUSCINETTO 6203 ZZ-QE6 BEARING					
9	1127640006	1		CALOTTA COVER					
10	1127010801	2		VITE M6X139 UNI-5737 SCREW					
11	1127070060	1		O-RING O RING					
12	1124200002	1	20	KIT PIASTRA VALVOLE VALVE PLATE KIT					
13	1127070849	1		GUARNIZIONE GASKET					
14	1127210001	1	30	ELEMENTO FILTRANTE FILTER CARTRIDGE					
15	1120002067	1		KIT FILTRO KIT					
16	1124020067	1		KIT TESTA HEAD KIT					

Q.ty = Quantità unitaria / Single unit quantity / Quantité unitaire / Cantidad unitaria / Einzeleinheitsmenge
Q.ty* = Ricambi consigliati in percentuale / Suggested spare parts in percentage / Pièces de rechange suggérées en pourcentage / Piezas de repuesto sugeridas en porcentaje / Vorgeschlagene Ersatzteile in Prozent